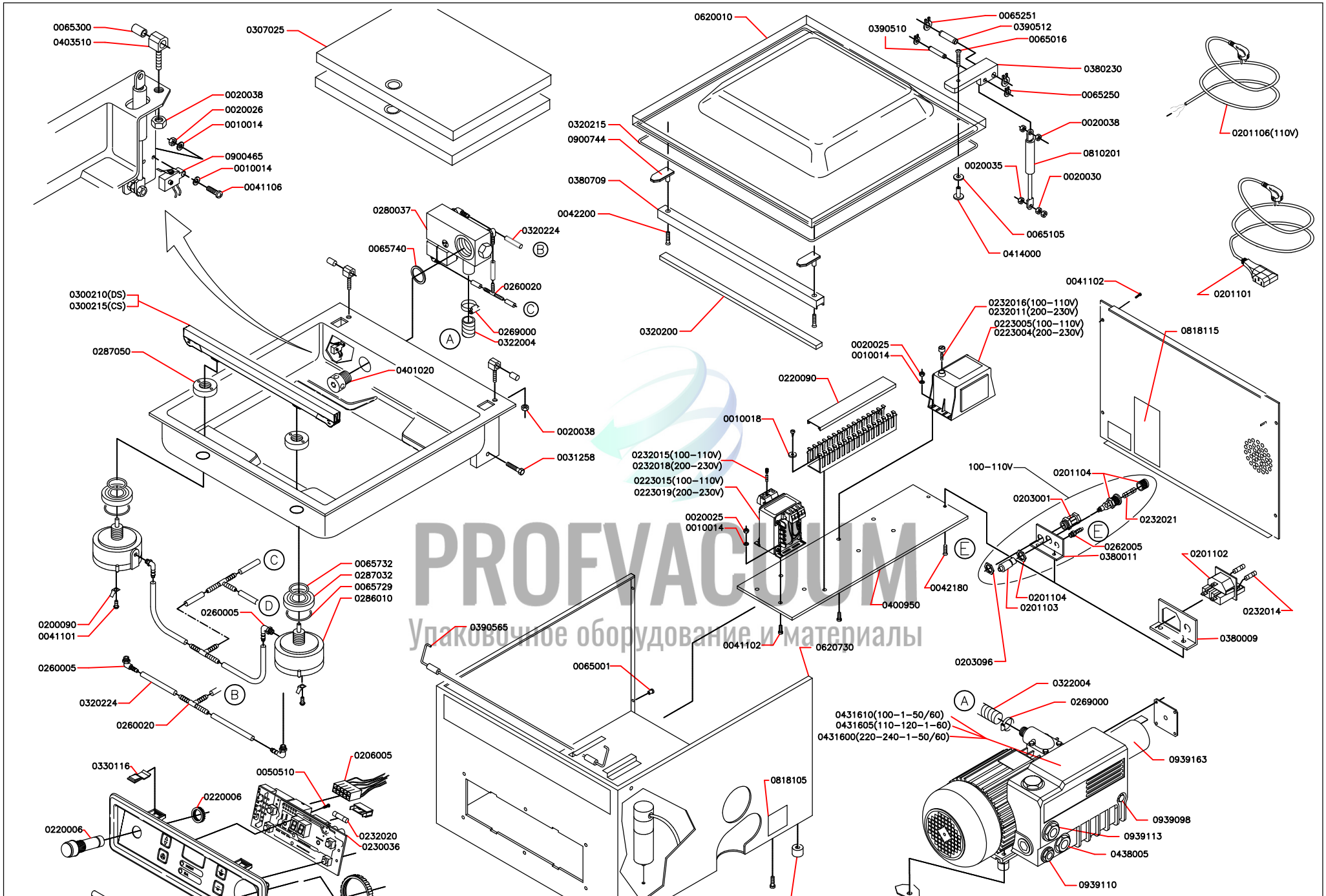

PROFVACUUM
Упаковочное оборудование и материалы

Scale:	Name:	Exploded View Jumbo 42
Date: Aug 2011		
Drawn by: MD		
HENKELMAN B.V. PO. box 2117 5202 CC 's-Hertogenbosch Tel. ++31(0)73 – 6213671 Fax ++31(0)73 – 6221318 The Netherlands	A 4	Drawing: Page 1–1
		REV. 052

Ownership explicitly reserved. Multiplication or information to third – parties in any form is not permitted without written permission of the owner.